Quick Start: Single Color

White / IC Series 2-wire tape · DIM mode

IMPORTANT: Read all instructions before installation. Refer to the full controller manual for complete details.

1 COMPONENTS

PS-24V200WND	24VDC 200W power supply
RF-WIFI-CNTRL-5CH-4A	RF / Wi-Fi LED controller
RF-WSR-SCDIM-BTR-WH	RF wireless single-color wall remote
IC-24NB301.5	24V LED tape
ST-T-W2P	Screw terminal tape-to-wire connector, 2-pin
T-T2P	Tape-to-tape connector, 2-pin

SET DIP SWITCH FIRST

DIM

Switch 1 **DOWN**
Switch 2 **DOWN**

Factory default is RGB+CCT (both UP). Set the switch with power off.

2 SYSTEM LAYOUT

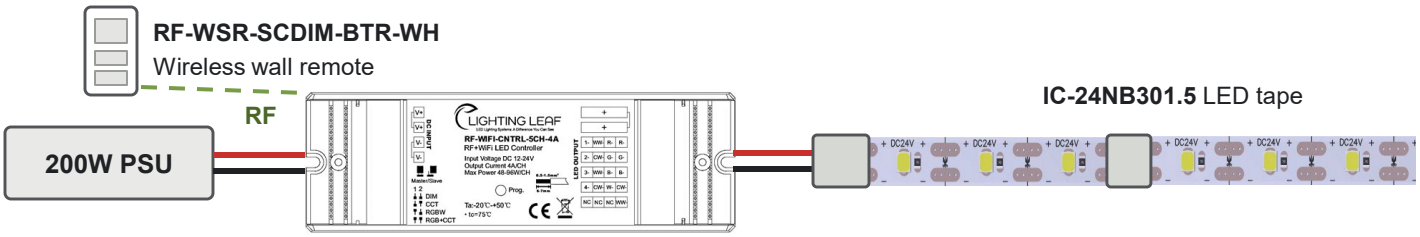

PS-24V200WND
200W · powers up to 130 ft

RF-WIFI-CNTRL-5CH-4A
Controller · DIM mode

ST-T-W2P
Tape-to-wire

T-T2P
Tape-to-tape

3 WIRE TERMINATIONS

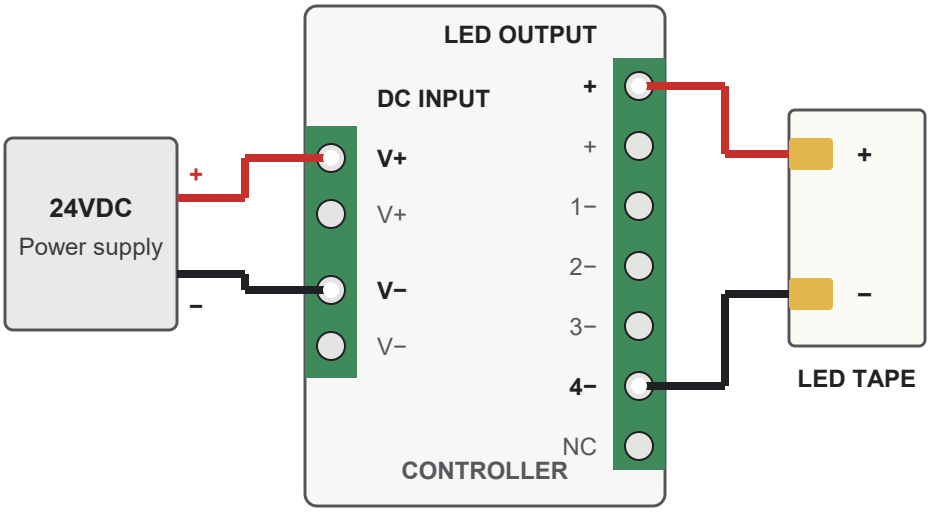

LED OUTPUT MAP BY MODE

T	DIM	CCT	RGBW	RGB+CCT
+	**+**	+	+	+
1	**1–**	WW–	R–	R–
2	**2–**	CW–	G–	G–
3	**3–**	WW–	B–	B–
4	**4–**	CW–	W–	CW–
5	NC	NC	NC	WW–

Up to 64 ft: tape **+** to **+**, tape **–** to **4–**. Longer runs: split across **1–** to **4–**.

Wire prep: strip 6–7 mm. Terminals accept 0.5–1.5 mm² (20–16 AWG).

Load: 4A max per channel (96W at 24V), about 64 ft of IC-24NB301.5 per output.

Input: 12–24VDC. Red or white lead to V+, black lead to V−.

Ambient: −20 °C to +50 °C. Case temperature (tc) 75 °C max.

Products may only be purchased through an authorized integration partner. Visit lightingleaf.com for current specifications and instructions.

Quick Start: Radiance RGB

Radiance RGB 4-wire tape · RGBW mode

IMPORTANT: Read all instructions before installation. Refer to the full controller manual for complete details.

1 COMPONENTS

PS-24V200WND	24VDC 200W power supply
RF-WIFI-CNTRL-5CH-4A	RF / Wi-Fi LED controller
RF-WSR-RGB+W-BTR-WH	RF wireless RGB+W wall remote
R-24RGB4.4	Radiance RGB LED tape
R-RGBT-TFWB4P	Radiance RGB flex wire bridge connector, 4-pin
R-RGBT-T4P	Radiance RGB tape-to-tape connector, 4-pin

SET DIP SWITCH FIRST

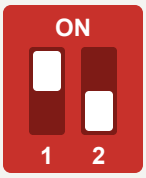

RGBW

Switch 1 **UP**
Switch 2 **DOWN**

Factory default is RGB+CCT (both UP).
Set the switch with power off.

2 SYSTEM LAYOUT

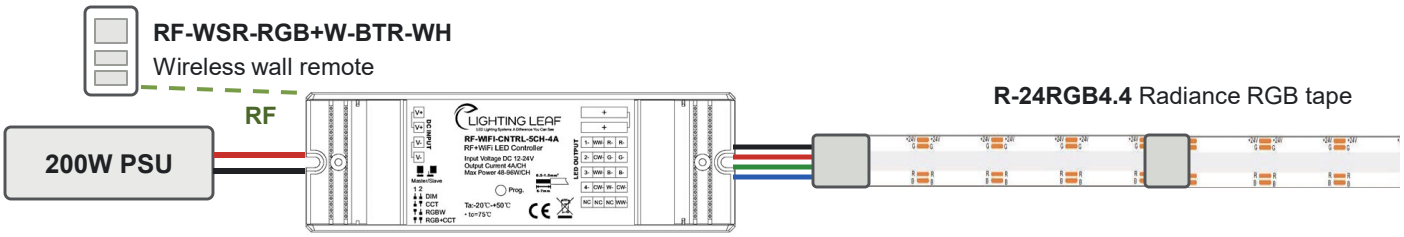

PS-24V200WND
200W · powers up to 43 ft

RF-WIFI-CNTRL-5CH-4A
Controller · RGBW mode

R-RGBT-TFWB4P
Flex wire bridge

R-RGBT-T4P
Tape-to-tape

3 WIRE TERMINATIONS

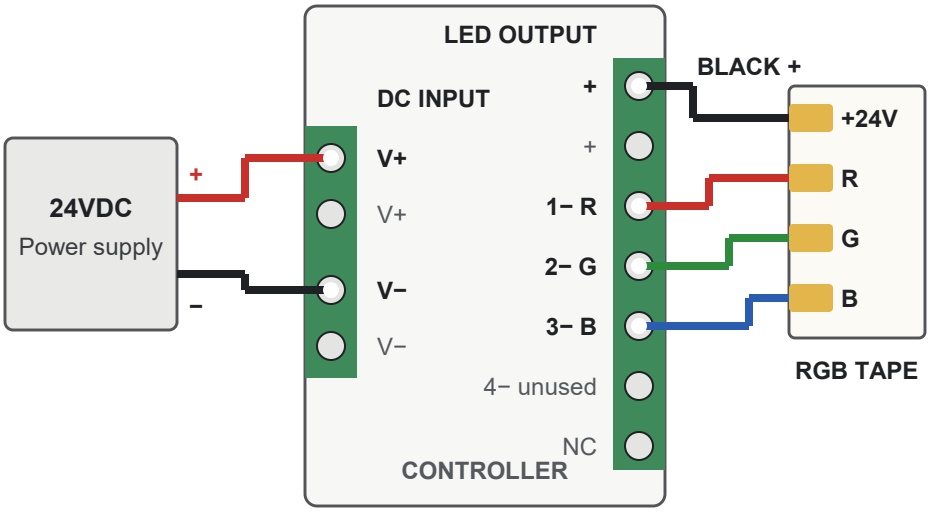

LED OUTPUT MAP BY MODE

T	DIM	CCT	RGBW	RGB+CCT
+	+	+	**+**	+
1	1−	WW−	**R−**	R−
2	2−	CW−	**G−**	G−
3	3−	WW−	**B−**	B−
4	4−	CW−	W−	CW−
5	NC	NC	NC	WW−

Wire code: BLACK = +24V common. RED, GREEN, BLUE = channel negatives.

Wire prep: strip 6–7 mm. Terminals accept 0.5–1.5 mm² (20–16 AWG).

Input: 12–24VDC. Red or white lead to V+, black lead to V−.

White controls: the app and remote White functions do not drive RGB tape. A paired RGB+W remote cycles 3 preset whites.

Load: 4A max per channel (96W per channel at 24V).

Products may only be purchased through an authorized integration partner. Visit lightingleaf.com for current specifications and instructions.

Quick Start: Pairing & App

Applies to Single Color and Radiance RGB installs

BEFORE PAIRING: Wire the controller per page 1 or 2, set the DIP switch, then apply power.

A PAIR AN RF WALL REMOTE

Up to 8 remotes per controller

1. Wire the controller per its diagram and **power it on**.
2. Press the controller's **Prog** button **once**.
3. Press **any button** on the remote. Lights **flicker once** = paired.

B PAIR THE LIGHTING LEAF APP

PHONE CHECKLIST

- **Bluetooth ON** in the phone's settings.
- **Allow** the Lighting Leaf app to use Bluetooth and Local Network.
- Phone on **2.4 GHz Wi-Fi**, not 5 GHz.

1. Download **"Lighting Leaf"** from the App Store or Google Play. Register with your region and email, enter the verification code, then log in.
2. Press **Prog 5 times** quickly on the controller. Lights **flash twice** = pairing mode. Go straight to step 3.
3. In the app tap **"+" / Add Device**, then add the discovered controller. Do not use "Add Manually" or the phone's Bluetooth menu.

? APP CAN'T FIND THE CONTROLLER? SPLIT THE WI-FI BANDS

The router is likely broadcasting one network name for both 2.4 GHz and 5 GHz, and the phone is on 5 GHz.

1. Log into the router
Router app, or its IP address in a browser.

2. Separate the bands
Turn off Band Steering / Smart Connect. Create two SSIDs, e.g. Home_WiFi_2.4G and Home_WiFi_5G.

3. Reboot the router
Wait until both networks appear.

4. Join 2.4 GHz
Connect the phone to the 2.4 GHz network and stay on it until setup is complete.

FACTORY RESET

Cycle power off/on 5 times

Unplug and re-plug the power supply 5 times in a row. Clears all settings. Use it to troubleshoot or restart pairing.

3 BUILT-IN WIRELESS PATHS

Sub-1 GHz RF: long-range; remotes pair directly on a dedicated channel.

Bluetooth (BLE): finds the controller at setup, then local control.

Wi-Fi: network and remote control. The app reconnects over whichever is available.

LIGHTING LEAF

Scan to download.

3RD-PARTY SMART DEVICES

Use the **Smart Life** app for Amazon Alexa and Google Assistant. Scan to download.

Products may only be purchased through an authorized integration partner. Visit lightingleaf.com for current specifications and instructions.